GEOLOGIC DIVISION ROCK STORAGE FACILI WR

2/85

INSTRUCTIONS: -
1 Submit original and THREE COPIES of each page to Bob Boyer, MS 916; one copy will return to collector. Complete box numbers and description below.

DISPOSABLE AFTER:

ACCESSION #

COPY FOR:
WAREHOUSE
OFFICE ✓
BRANCH
COLLECTOR

COLLECTOR/PROJECT	EXTENSION	BRANCH	MAIL STOP
Munroe, Bob			

OFFICE USE	BOX #	DESCRIPTION OF CONTENTS (INCLUDE DATES)
	1	"A" samples - Liberia
	2	Liberia, Th 1-6, ASH, Osyoo5
P-	3	"A" samples: ECH-D, ECH-A, PMI,3, PLW, BCD, 4-I00-67, 4-103-67
	4	"A" samples: Death Valley, Death Valley Race Track, RRR, NAV, SC
2315	5	"A" samples: 4-101-67, 163, 4-1-67 etc. 4-1-67, 7BB6, 6BB7, 8A&B, 0-36 to 432 JE-11-67, JE service Coronation Isle, Eilsen AFB
	6	"A" samples: Sample # 16-21 Wilder CRK, Esetuk Glacier L-110's, SA-no's, SZ-21, C-no's, YATES
	7	"A" samples: YATES,SY-22, RWT, Rte-299, ADN, ASJ
	8	"A" samples: Auburn, DFC, Pebel Mt, SB, JM-1, AL-CR-1
	9	"A" samples: Aeolian Buttes, JACI, WTE, SZD, BSC
	10	"A" samples: WC-2A, Aurora, Mahogany #2
	11	Pt. Arena 10'-500' (2 of 10)
	12	Malheur Reserve-2, Catlow Valley-3
	13	Getty Oil State PRC 4572 No. 23-1 S23,T2N,R26E Mono 119'-1000' BOx 1, Set ??
	14	Warner Valley, Majuba DH-9, CHAR N. P 42 17' 5#1
	15	AD#2
	16	Edison Ca Bx 2, Set #1 1000'-2120' Geothermal Resources State PRC 43 7.1 No. 1 S17, 1N, R7E Mono Co.
11-26-90	17	Getty Oil Co State PRC 4572 23-1 S23,T2N,R26E Bx 2, Set 1, Mono Co. 1000'-1870'
	18	Getty Oil Co State PRC 4572 23-1 S23,T2N,R26E Bx 3, Set 1, Mono Co. 1870'-2437' TP Paleontology - unwashed, wet
	19	SWM Swales Mtn #2
P 3384	20	JAC-70? 0'-140'
	21	2-4 3/4 K1 7295, 7296 2-4 3/4 K2A 12, 13 2-4 3/4 K7T 4061, 9025
	22	Edison Co Bx 3, Set #1 2120'-3620' Geothermal Resources State PRC 4307 (No) S17,1N,27E Mono Co.
	23	Edison Co. Bx 1, Set 1, S17,1N,27E, Mono Co. 0'-1000' State PRC 4397 Geothermal Resources
P.	24	Temblor 1
	25	Catlow Valley 1
	26	Catlow Valley 1 & 5
	27	Catlow Valley 5
	28	Watterson Canyon 1of2, Watterson Trough West 2of2
	29	Watterson Trough West 1of2
	30	Watterson Canyon 2of2 chips
	31	Edison Co. WET 3620'-4110' TD Bx 4, Set 1 Mono Co. Geothermal Resources State Pr 4397, #1 S17,1N,27E

86 2 2273

GEOLOGIC DIVISION ROCK STORAGE FACILIT WR

2/85

INSTRUCTIONS:
1 Submit original and THREE COPIES of each page to Bob Boyer, MS 916; one copy will return to collector. Complete box numbers and description below.

DISPOSABLE AFTER:

ACCESSION #

COPY FOR:
WAREHOUSE
OFFICE ✓
BRANCH
COLLECTOR

COLLECTOR/PROJECT	EXTENSION	BRANCH	MAIL STOP

OFFICE USE	BOX #	DESCRIPTION OF CONTENTS (INCLUDE DATES)
	32	MWR-1 0'-120'
	33	MWR-1 120'-305'
	34	USL 1-3 0'-2854'
	35	Buffalo Valley 22 Oct74 1 disc ea PEC - 1,2,3,4,5,6
Z 315	36	Sierra Valley, Plumas Co., CA Filippini A#1 Phillips Petr Co from L H Axtell, Bx 752, Del Mar, CA 12/26/73 2 pcs core
	37	Eilsen AFB Chips return to warehouse 2/76

(12) 11-26-90

86 2 2273

86-2 2273 Munroe, Bob (04)

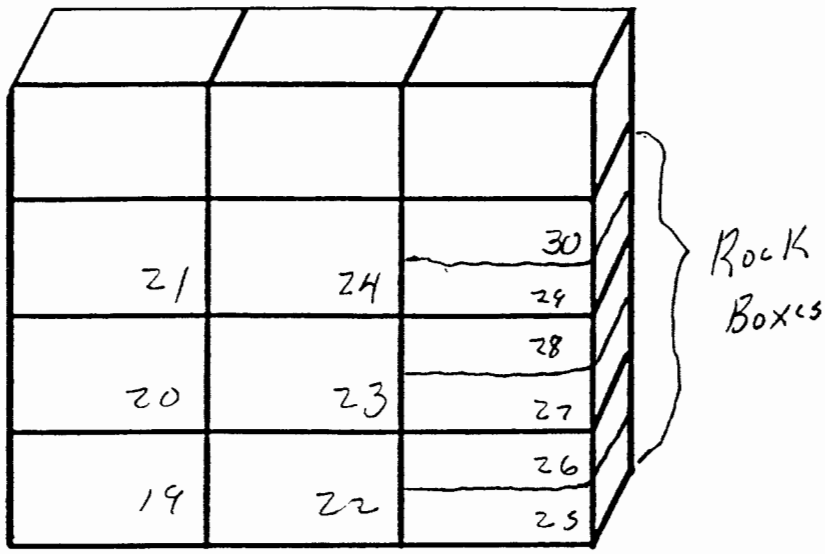

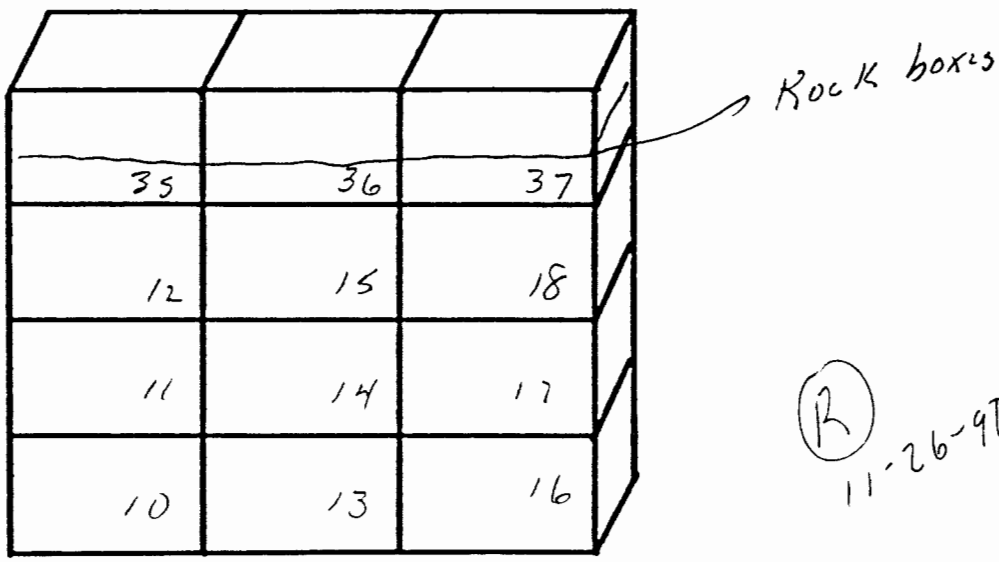

(R) 11-26-90

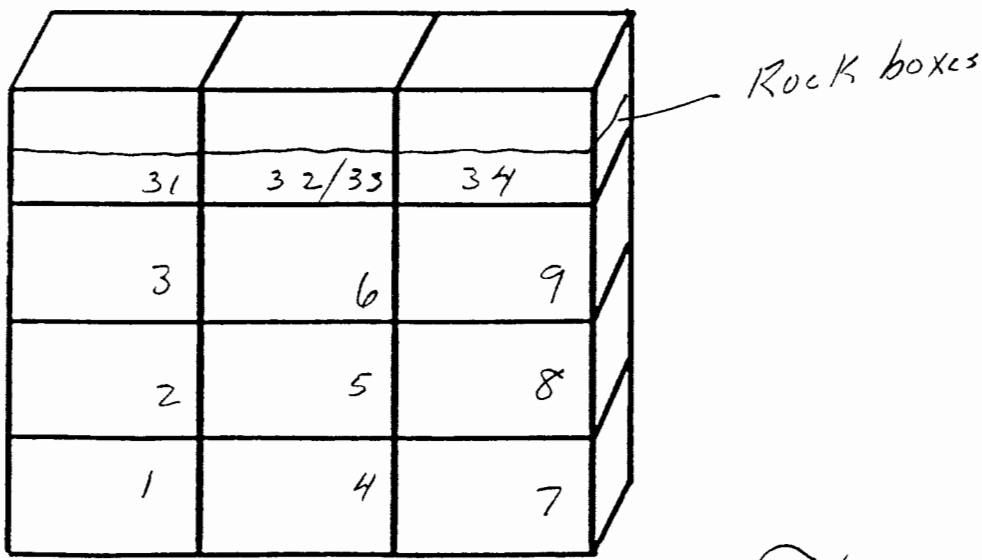

86-2-2273